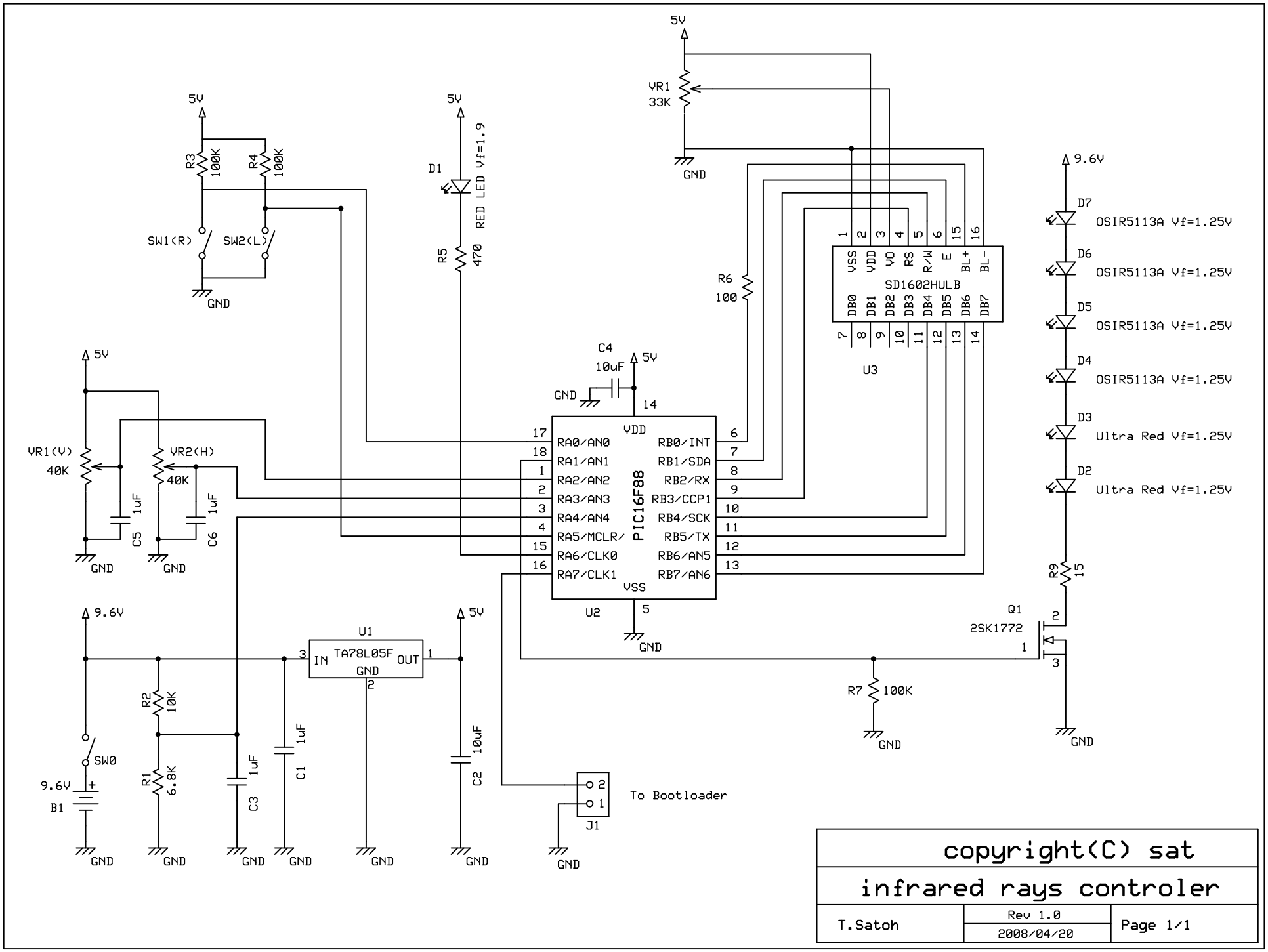

copyright(C) sat		
infrared rays controler		
T.Satoh	Rev 1.0 2008/04/20	Page 1/1