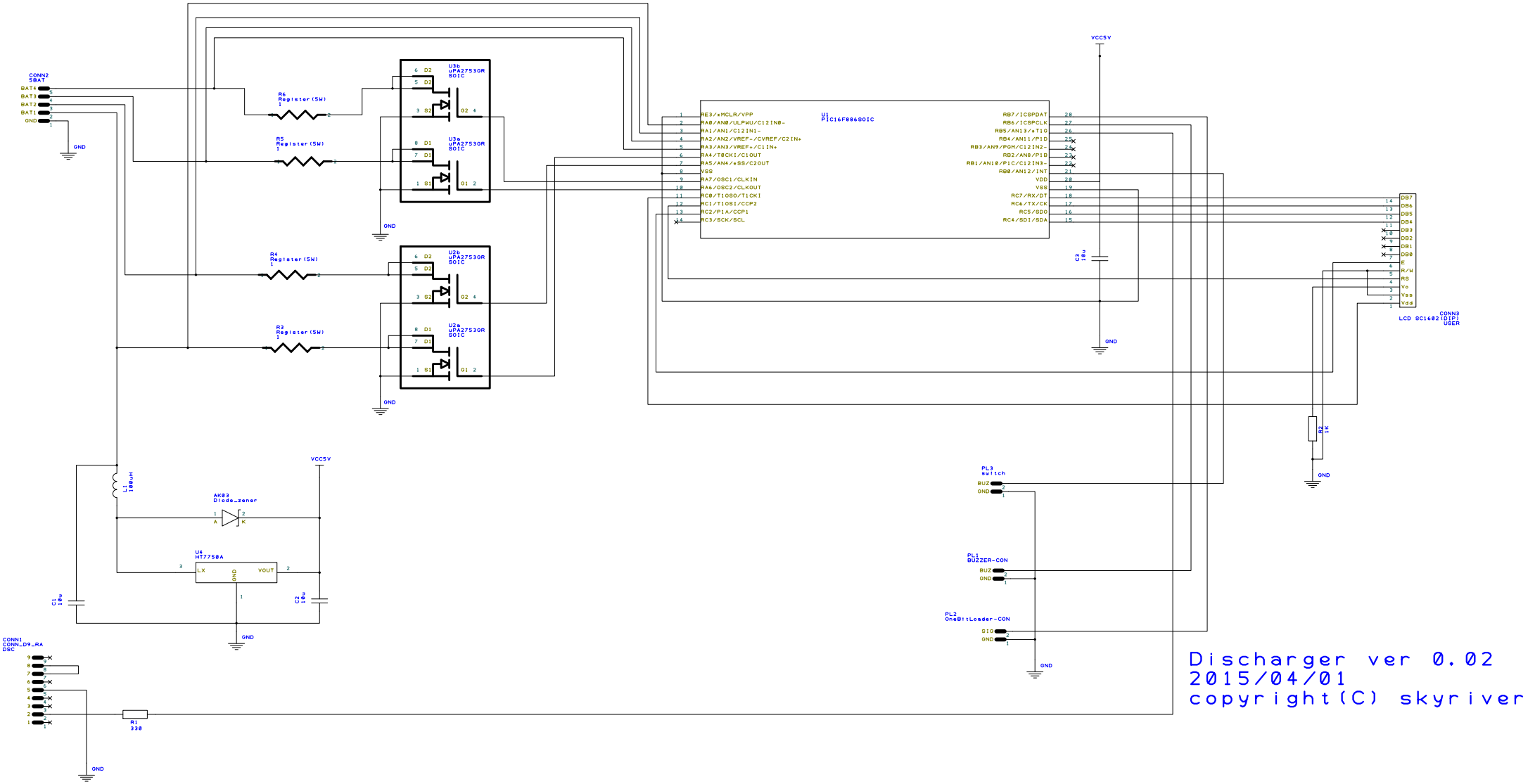
CONN2
5BAT
BAT4
BAT3
BAT2
BAT1
GND
R6
Register(5W)
1
R5
Register(5W)
1
R4
Register(5W)
1
R3
Register(5W)
1
U3b
uPA2753GR
SOIC
U3a
uPA2753GR
SOIC
U2b
uPA2753GR
SOIC
U2a
uPA2753GR
SOIC
U1
PIC16F886SOIC
RE3/*MCLR/VPP
RA0/AN0/ULPWU/C12IN0-
RA1/AN1/C12IN1-
RA2/AN2/VREF-/CVREF/C2IN+
RA3/AN3/VREF+/C1IN+
RA4/T0CKI/C1OUT
RA5/AN4/*SS/C2OUT
VSS
RA7/OSC1/CLKIN
RA6/OSC2/CLKOUT
RC0/T1OSO/T1CKI
RC1/T1OSI/CCP2
RC2/P1A/CCP1
RC3/SCK/SCL
RB7/ICSPDAT
RB6/ICSPCLK
RB5/AN13/*T1G
RB4/AN11/P1D
RB3/AN9/PGM/C12IN2-
RB2/AN8/P1B
RB1/AN10/P1C/C12IN3-
RB0/AN12/INT
VDD
VSS
RC7/RX/DT
RC6/TX/CK
RC5/SDO
RC4/SDI/SDA
VCC5V
C3
1u
CONN3
LCD SC1602(DIP)
USER
DB7
DB6
DB5
DB4
DB3
DB2
DB1
DB0
E
R/W
RS
Vo
Vss
Vdd
R2
1K
L1
100uH
AK03
Diode_zener
U4
HT7750A
LX
GND
VOUT
C1
10u
C2
10u
PL3
switch
BUZ
GND
PL1
BUZZER-CON
PL2
OneBitLoader-CON
SIG
CONN1
CONN_D9_RA
DSC
R1
330
Discharger ver 0.02
2015/04/01
copyright(C) skyriver