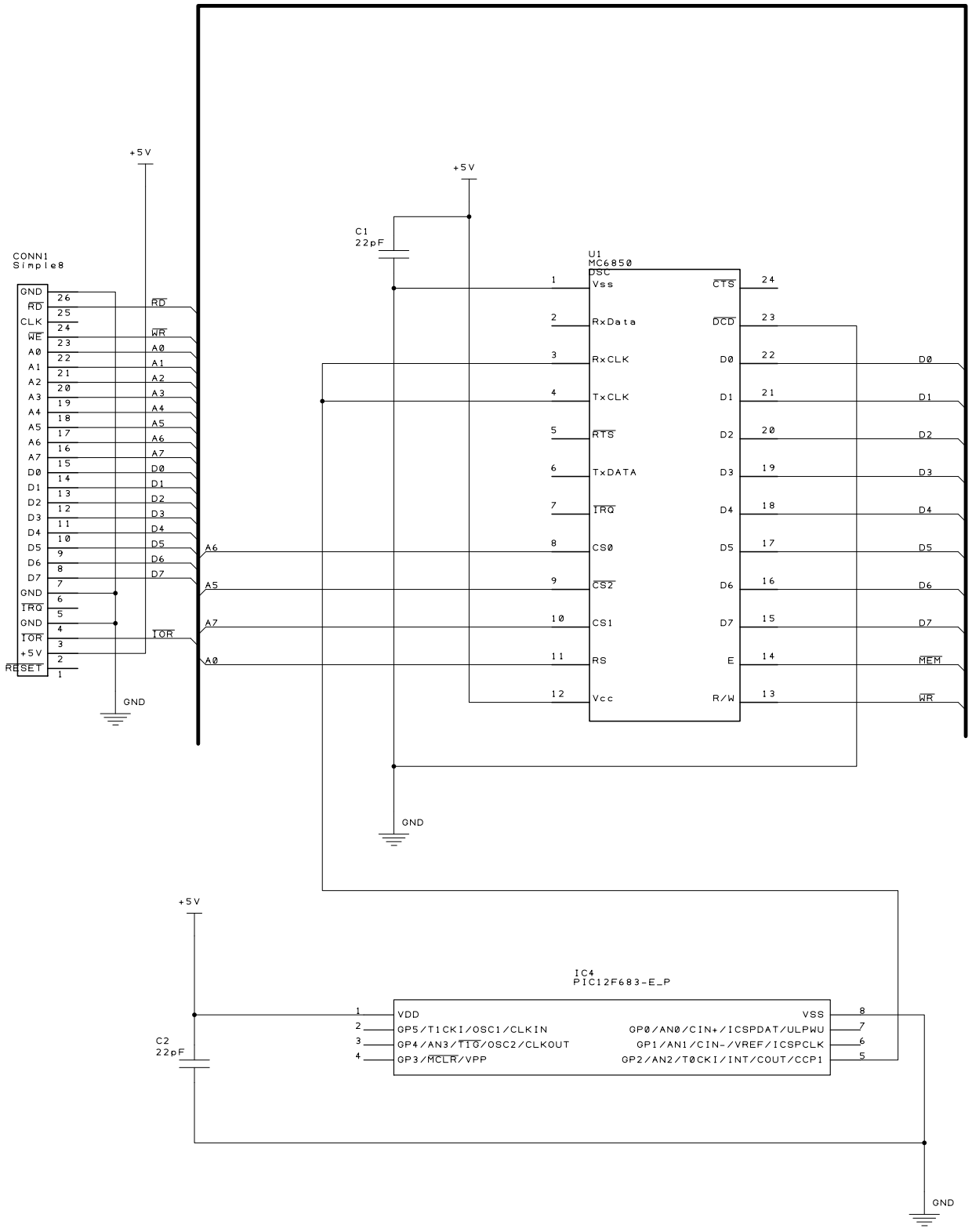
CONN1
Simple8
GND
RD
CLK
WE
A0
A1
A2
A3
A4
A5
A6
A7
D0
D1
D2
D3
D4
D5
D6
D7
GND
IRQ
GND
IOR
+5V
RESET
+5V
GND
C1
22pF
U1
MC6850
DSC
Vss
RxData
RxCLK
TxCLK
RTS
TxDATA
IRQ
CS0
CS2
CS1
RS
Vcc
CTS
DCD
D0
D1
D2
D3
D4
D5
D6
D7
E
R/W
MEM
WR
GND
+5V
C2
22pF
IC4
PIC12F683-E_P
VDD
GP5/T1CKI/OSC1/CLKIN
GP4/AN3/T1G/OSC2/CLKOUT
GP3/MCLR/VPP
VSS
GP0/AN0/CIN+/ICSPDAT/ULPWU
GP1/AN1/CIN-/VREF/ICSPCLK
GP2/AN2/T0CKI/INT/COUT/CCP1
GND